High Visibility, Even in Sunlight

The ultrabright LED indicator, featuring high-power LED
New Wihite LED type for lighting and Dual-color type

MLC Ultrabright LED Indicator

The ultrabright white LED type is also available for lighting

Reference illuminance: Approx. 70 lux in a place 50-cm just below the lighting

A ultrabright LED type, which provides clear visibility even in sunlight: TYP.7000cd/m^2 (reference value)
Excellent visibility thanks to red, green, and yellow LED colors and diamond-cut cover
Providing high visibility by introducing the ultrabright LED and diamond cut cover; expanding uses such as warning indicators
The IP65 compliant type (providing protection from water flows) withstands both rain and dust (this applies to the front only when the panel is attached)
Easy ϕ25 hole screwing and the flat and dorm shapes available with the 30 square and 30 round types
Shade hood and terminal cover (for screw terminals) available as accessories

Specifications

Insulation resistance	100MΩ or greater with a DC 500V Megger
Dielectric strength	Between terminals and ground: AC1500VRMS, 50/60Hz for 60 sec. at normal temperature and humidity
Reverse dielectric strength	150V
Ambient temperature	−10℃ to 50℃
Ambient humidity	80%RH or less

Rating

Voltage rating (V)	Current rating (mA)					
	Mono-Color			Dual-Color		White LED for Lighing
	Red	Green	Yellow	Red	Green	
DC12V (±5%)	56	26	48	25	25	40
DC24V (±5%)	28	13	24	25	25	25

Dimensions

Square flat type

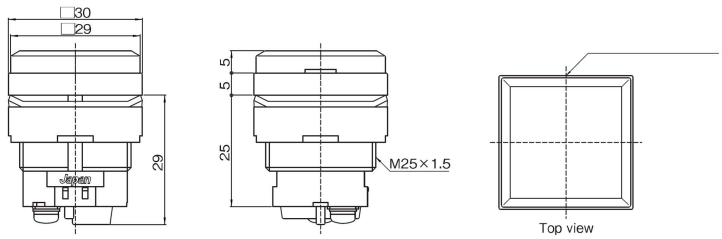

Square dome type

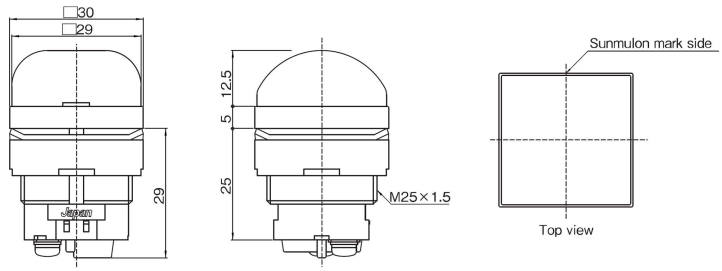

Round flat type

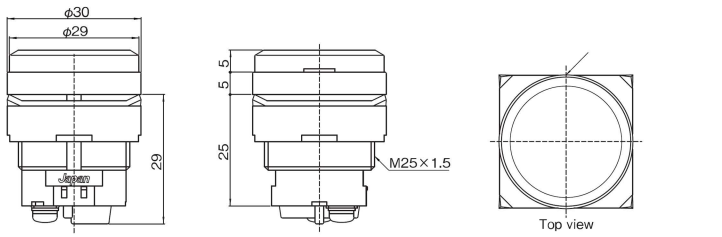

Round dome type

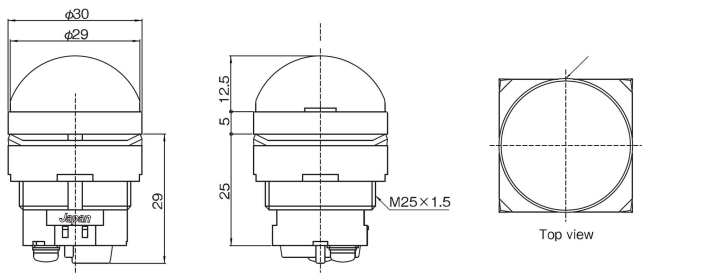

* Please note that height of the MLC type is different from the one of the current ML indicator.

Ext. Installed Resistor Data

● See the table below for externally installed LED resistors

Ta = 25℃

ITEM		Mono-Color						Dual-Color	
		DC12V			DC24V			DC12・24V	
		Red	Green	Yellow	Red	Green	Yellow	Red	Green
Max. operating current		60	60	60	30	30	30	30	30
DC reverse voltage		150							
Diode voltage in regular direction		0.8							
Voltage in regular direction V_F (V) (reference value)		6.3	6.2	6.6	12.6	12.4	13.2	6.3	9.3
*1) Recommended operating current I_F (mA)		50	30	50	25	15	25	25	25
*2 Current decrease rate of LED (mA/ °C) (between t_1 °C and t_2 °C) (Reference value)		2 (85~100)	1.2 (75~110)	2 (85~100)	1 (85~100)	0.6 (75~110)	1 (85~100)	1 (85~100)	0.6 (75~110)
Conditions at the time of pulse lightening	Pulse width PW (mS)	0.1	10	0.1	0.1	10	0.1	0.1	10
	Duty ratio D_R	10^{-1}							
	Max. pulse allowable voltage in regular direction 1_{FP} (mA)	240	200	240	120	100	120	120	100
	*1 Recommended operating current 1_F (mA)	200	100	200	100	50	100	100	50
	*2 Current decrease rate of LED (mA/ °C) (between t_1 °C and t_2 °C) (Reference value)	8 (85~100)	1.2 (75~110)	8 (85~100)	4 (85~100)	0.6 (75~110)	4 (85~100)	4 (85~100)	0.6 (75~110)
Wiring figure		Figure 1			Figure 2			Figure 3	

*1) The recommended operating current indicates the standard set value when the ambient temperature for the MLC indicator is 50°C (upper limit), and when the internal temperature increase is taken into consideration.

*2 (between t_1 °C and t_2 °C) indicates the range of current decreases (current derating) (temperature at the beginning-max. temperature.)

● Use the following formulas to calculate the externally installed resistor R.

Figure 1

$$R = \frac{V_{CC} - V_D - V_r - V_F}{I_F} \qquad \left(V_r = \frac{I_F}{2} \cdot r \quad r = 16\,\Omega \right)$$

Figure 2

$$R = \frac{V_{CC} - V_D - V_F}{I_F}$$

V_{CC} : Power supply voltage
I_F : Recommended operating current
V_F : LED Forward voltage
V_D : Diode Forward voltage

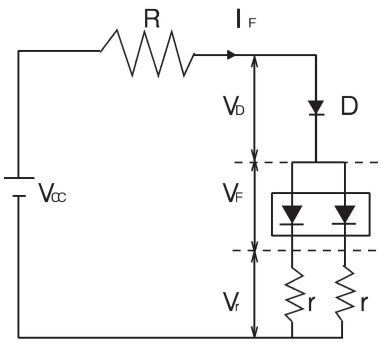

Figure 1

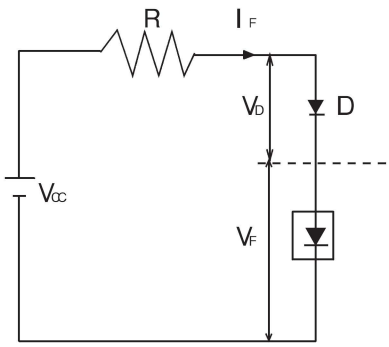

Figure 2

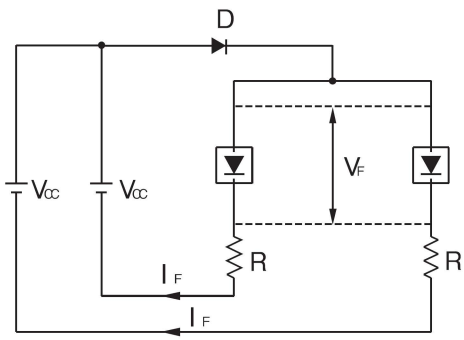

Figure 3

r : Install the resistor to ensure the V_F balance stability of the LED

Panel Cut-Out Dimensions

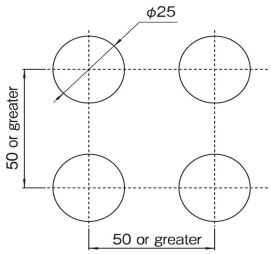

Thickness of the board which can be used for mounting

Note: To install together, please set apart from each other by at least 50mm from the panel cut center line for heat radiation.

Terminal Layout

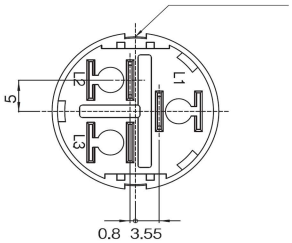

#187 tab/solder terminal

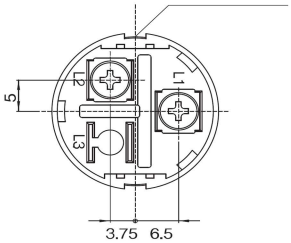

Screw terminal

Terminal No.	Mono-color illumination /Lighting	Dual-Color illumination
L1	Anode(+)	Anode(+)
L2	Cathode(−)	Cathode(−)
L3	(No terminal)	Cathode(−)

Accessories

Terminal cover

PART No.	ML-1561

* For screw terminals

Shade hood

Shape	Part No.
Square	ML-1568
Round	ML-1567

* A piece of rubber packing is set inside.

●Installing the terminal cover

*Only screw terminals can be used

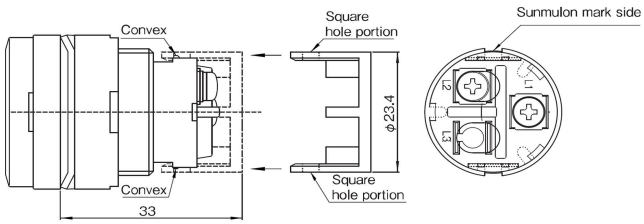

When the terminal cover is used

* Fit the convex and the square hole portion to the direction as illustrated above until it clicks.

●Installing the shade hood (square and round)

* With water resistant structure (Otherwise rubber packing is not required)

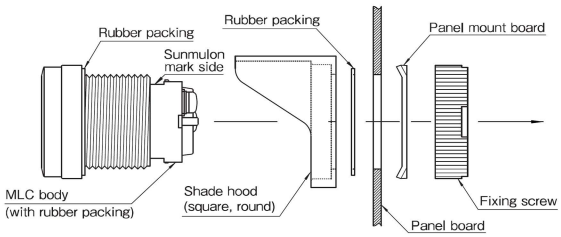

●Shade hood dimensions

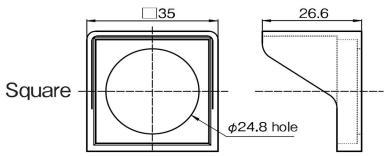

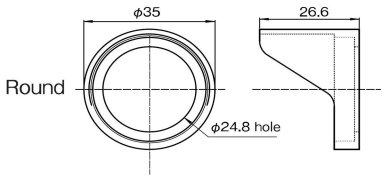

Replacement Parts

●Indicator Cover (Diamond cut specifications)

Name	Square flat cover	Round flat cover	Square dome cover	Round dome cover
Part No.	ML-1556-CC	ML-1555-CC	ML-1558-CC	ML-1557-CC

●Cover (For Lighting)

Square flat	ML-0566-CC
Round flat	ML-0567-CC

●Filter (For Lighting)

Shape	Milk-white	Clear
Square	ML-0570-LM	ML-0570-CC
Round	ML-0572-LM	ML-0572-CC

Tolerance : ±0.4mm

Ordering Code

Indicator

MLC–□ □ □ □ X □ □ □

●SHAPE/ILLUMINATION TYPE

S0	Square flat	Mono-color	
T0	Square dome	Mono-color	
R0	Round flat	Mono-color	
M0	Round dome	Mono-color	
S3	Square flat	Dual-color	※3)
T3	Square dome	Dual-color	※3)
R3	Round flat	Dual-color	※3)
M3	Round dome	Dual-color	※3)

●LED COLOR

701	Red	
181	Green	
901	Yellow	※
701181	Red/Green	※3)
X	Without LED	

●COVER

DC	Clear (diamond cut)	※1)
X	Without Cover	※2)

●HOUSING

K	Black
H	Gray

●FILTER COLOR

X	Without Filter

●TERMINAL

B	Fastening screw
P	#187 Tab/Soldering
X	Without Terminal

●PROTECTION

A	No Protection
B	Oil and Water-tight (IP65)

●Operating Voltage

2	12V
3	24V
5	12V Non-resistor
6	24V Non-resistor
X	Without LED

Non-resistor type, suitable external current limiting resistors must be installed. See the externally installed resistor data.

Notes
※1) Only the diamond cut shape is available for the cover of the MLC indicator.
※2) In case of Without Cover Square dome and Round dome type, Please specify Without Cover Square flat and Round flat type, for our convenience.
※3) LED color of Dual-Color type is Red/Green (701181) only. It is impossible to do simultaneous lighting.

Lighting

MLC –□ 161 □ □ □ □ □ □

● Shapes and Illumination Methods

S0	Square flat shape
R0	Round flat shape

● LED COLOR

161	White for lighting

● COVER

DC	Clear (diamond cut)	
C	Clear flat shape	※1)
X	Without Cover	※2)

● HOUSING

K	Black
H	Gray

● FILTER COLOR

※3)	4	Milk white
	9	Clear
※2)	X	Without Filter

● TERMINAL

B	Fastening screw
P	#187 tab/solder

● PROTECTION

A	No Protection
B	Oil and Water-tight (IP65)

● Operating Voltage

2	12V
3	24V

Notes
※1) The clear flat-shape cover, instead of the diamond cut type, is available for lighting.
※2) To use a dome type cover, please specify without cover and filter, place an order for the dome type cover separately.
※3) When the milk white filter is attached, the lighting provides soft illumination by diffusion, and brightness is halved.

Example Usage

● As an indicator for confirming operations outdoors

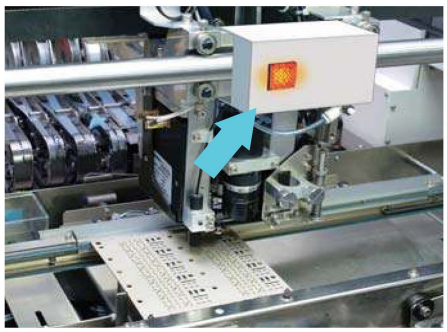

● For warming display when the device stops

● As lighting in a dark place

* Composite photographs are shown in the examples of use.
There is no relationship between our products and other items in the pictures.

Precautionary Notes for Handling

1. The MLC super hi-bright type is created based on the current ML indicator.
   However, please confirm the following points:
   1) The filter and cover of the current ML type can be used for the MLC type. Likewise, the diamond cut cover and shade hood of the MLC type can be used for the current ML type.
   2) The AC/DC 100V unit of the current ML type cannot be used for the MLC type.
   3) The MLC type is available as an integrated product. We are unable to accept orders for the illumination part and the body separately.

2. Please make sure of the following points for outdoor use.
   1) The IP65 compliant type (providing protection from water flows) is available for both the MLC type and the current ML indicator. When it is used outdoors, please use in accordance with the IP65 standards and our specifications.
   When it is mounted, please be sure that there is no dust or burrs, and no twisted and bent packing.
   2) In the case of the water protection type, please apply 0.98-1.47Nm for the screw fastening torque when it is mounted on the panel. In the case of no water protection type, apply 1.47Nm or less.

3. About brightness
   1) The indicator is displayed in brightness TYP.7000cd/m^2 (reference value) specified in the brochure represents the value in the brightest area on the surface of the MLC diamond cut cover (in a range of about four diamond cut spaces.)

4. About handling replacement parts and accessories
   1) To exchange the diamond cut cover, fit the △ portions (square hole and claw portions) as illustrated in Figure 1.
   * A notch of the diamond cut cover is created during the production process. It has nothing to do with the fitting with the body.
   2) To install the shade hood for the round type in the panel, if you fasten the mount screw, the body may turn together.
   Please push both sides of the hood (x area) with your fingers as illustrated in Figure 2 for easy installation.

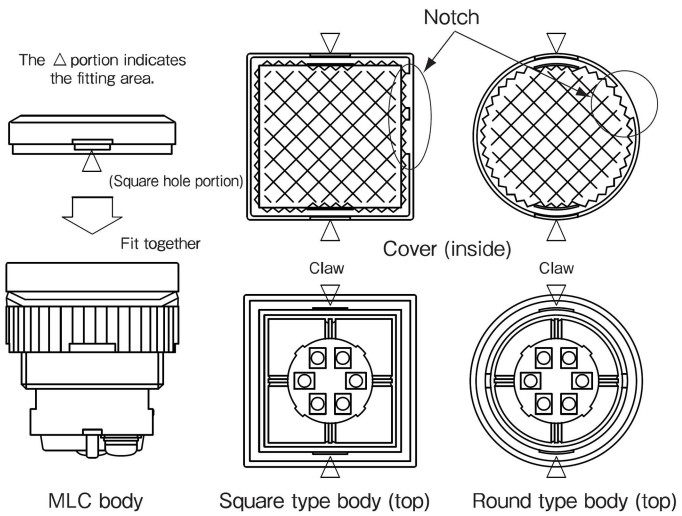

Figure 1: Installing the Diamond Cut Cover

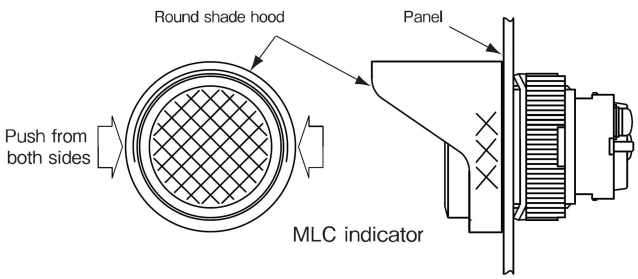

Figure 2: Installing the Round Shade Hood

Tolerance : ±0.4mm